Intelligent a.c. mitigation device 'VCSD' (Voltage-Controlled Short-circuiting Device) to minimize the negative effects of electromagnetic interferences on pipelines

Reiner KERSCHBAUM

DEHN + SOEHNE GmbH + Co.KG., Germany, reiner.kerschbaum@dehn.de

Abstract
This paper describes the functional principle of the intelligent decoupling device VCSD (Voltage-Controlled Short-Circuiting Device) and its use for pipelines influenced by interference voltage. The aim of this device is to discharge any interference voltage (transient, temporary and long-duration overvoltage) from the pipeline to a defined earth-termination system, without negatively affecting the cathodic protection potential (d.c. potential).

Keywords
a.c. corrosion; a.c. mitigation; intelligent a.c. decoupling device; lightning and surge protection;

Cathodically protected pipelines influenced by interference voltage

Since pipelines are widely distributed and highly networked, they are often influenced by interference voltages from various sources such as parallel high-voltage lines, traction power supply systems, earth fault currents and lightning effects. Interference voltages are non-system voltages which can occur in the form of transient, temporary or long-duration overvoltage depending on their duration. They can enter a system, for example an insulated pipeline, by means of galvanic, inductive or capacitive coupling and frequently cause damage to installations, parts thereof and persons. Special surge protection solutions allow to reduce these interference voltages to values below defined/uncritical limit values. In addition, a.c. corrosion can occur as a result of a.c. voltage interference [1]. The interference voltages described below may cause personal injury, material damage and, in case of long-duration interference, a.c. corrosion in certain circumstances [2], [3].

A.c. interference caused by high-voltage lines

High-voltage lines generate electromagnetic fields which may be inductively coupled to parallel pipelines and often occur in the form of permanent interference voltage. This interference may present a safety hazard to persons due to impermissibly high touch voltages and a.c. corrosion. In case of coating defects (damage), current can travel from the pipeline to the ground during the anodic half-wave and can lead to corrosion of the pipeline under certain circumstances.

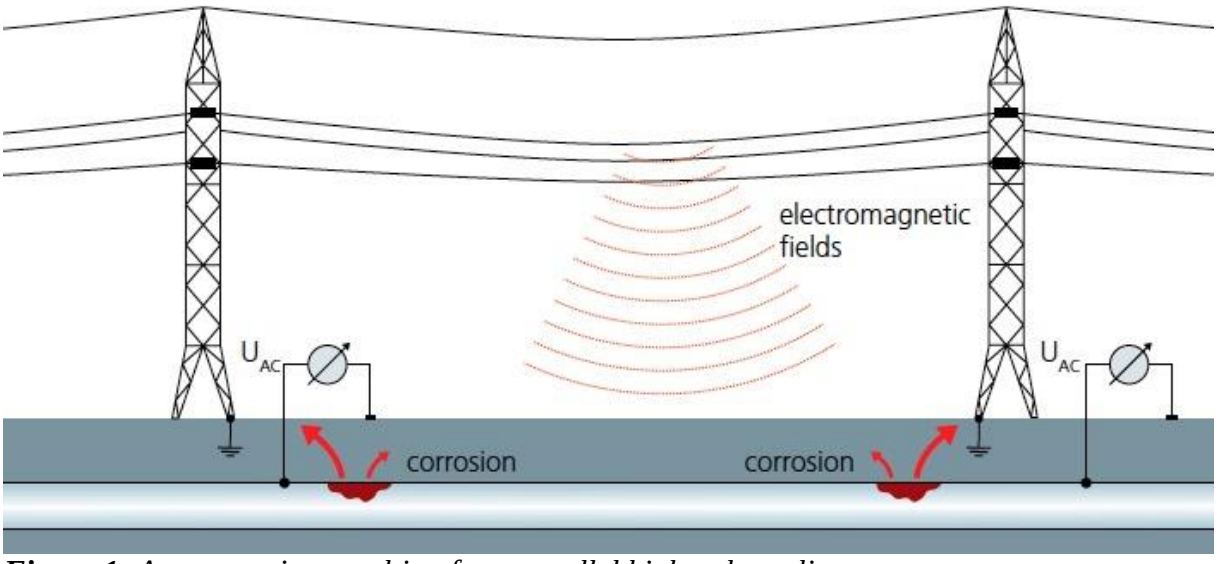

Figure 1: *A.c. corrosion resulting from parallel high-voltage lines*

Earth faults

An earth fault causes a potential gradient area in the surrounding soil whose potential affects pipelines located in this area. This potential gradient area thus spreads over to the relevant pipeline network as interference voltage. This interference voltage occurs for a short period of time (up to about 200 ms) and can present a safety hazard to persons or/and exceed the insulation strength of equipment connected to the pipeline (e.g. insulating joints).

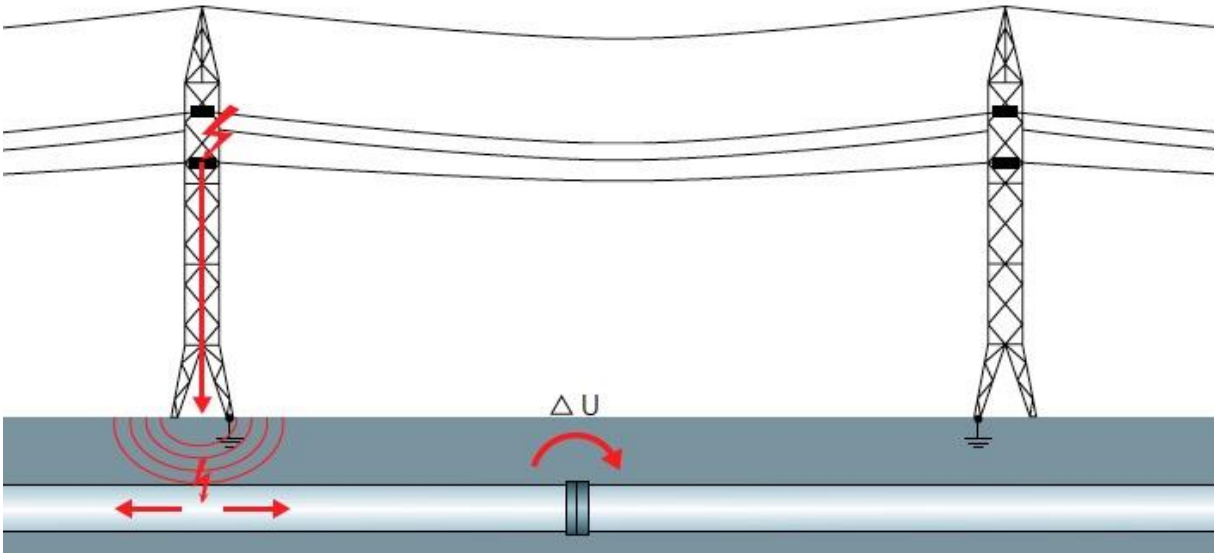

Figure 2: *Interference voltage caused by earth faults*

Electric railways

Electric railways produce galvanically coupled stray currents which travel through the ground and transfer to the pipeline through coating defects, thus changing the potential of the pipeline by means of interference voltages. The low-impedance connection via the pipeline serves as a parallel path for the traction return current back to the source. Also in this case, corrosion will occur at the points of current exit.

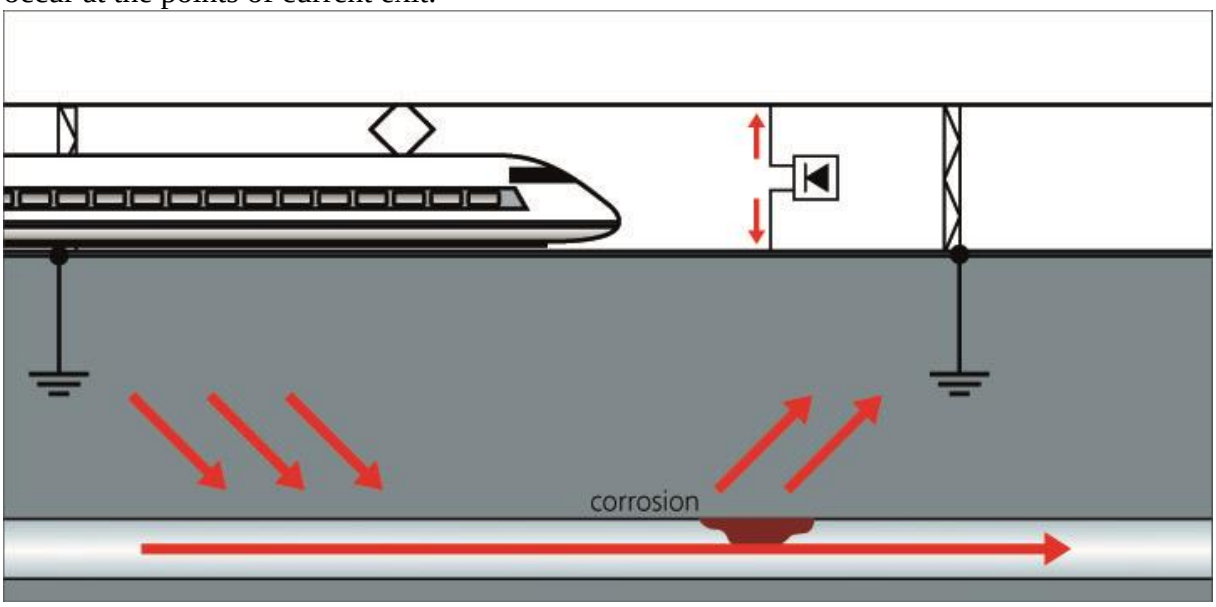

Figure 3: *Corrosion resulting from stray currents caused by electric railways*

Lightning strike

Lightning generates transient interference voltages against uninfluenced metal systems. Injected via a potential gradient area, it spreads over the entire pipeline network. The insulation strength of the insulating joints, which are installed on the pipeline to electrically isolate the pipeline sections, would be exceeded. Consequently, flashover occurs and the insulating joint is damaged.

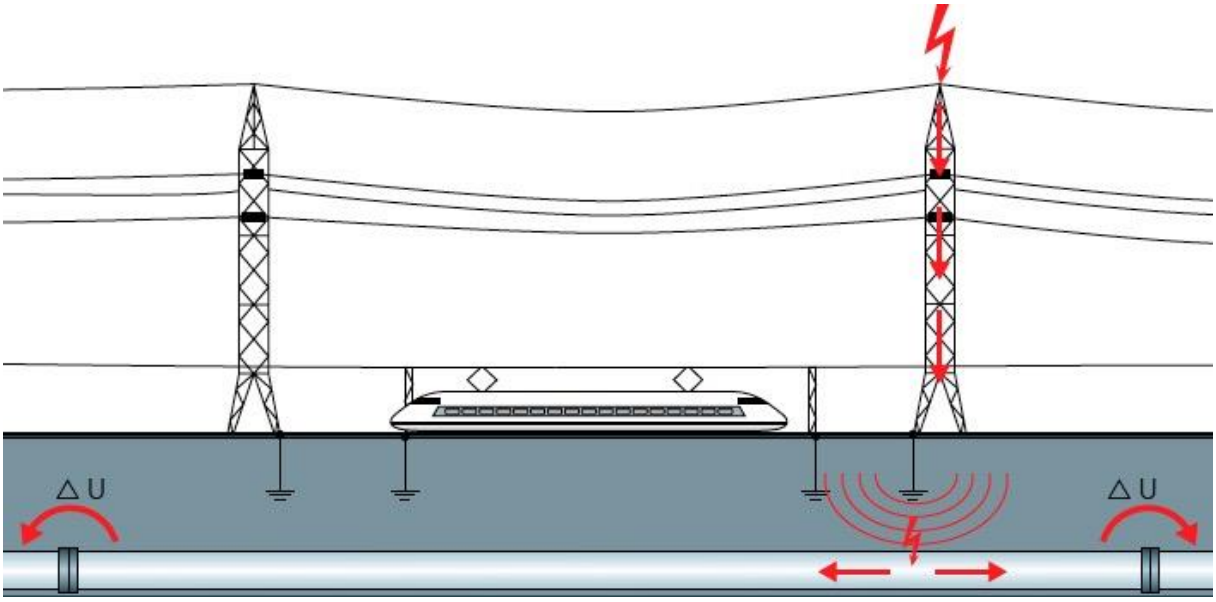

Figure 4: *Interference caused by direct and indirect lightning strikes*

<u>Intelligent decoupling device VCSD - Product features and functional principle</u>

The intelligent decoupling device VCSD 40 IP65 shown in **Figure 5** limits long-term, temporary and transient overvoltage. The voltage-controlled short-circuiting device of the decoupling device limits long-term a.c. voltages to a pre-set value without negatively affecting the desired d.c. potential of the cathodic protection. Such overvoltage of a certain duration or voltage level activates functional units of the VCSD assigned to the relevant overvoltage event which allow the interference voltage to be passed to ground without negatively affecting the cathodic protection potential (d.c. potential). This is achieved by blocking the cathodic protection current by series connected capacitors [4].

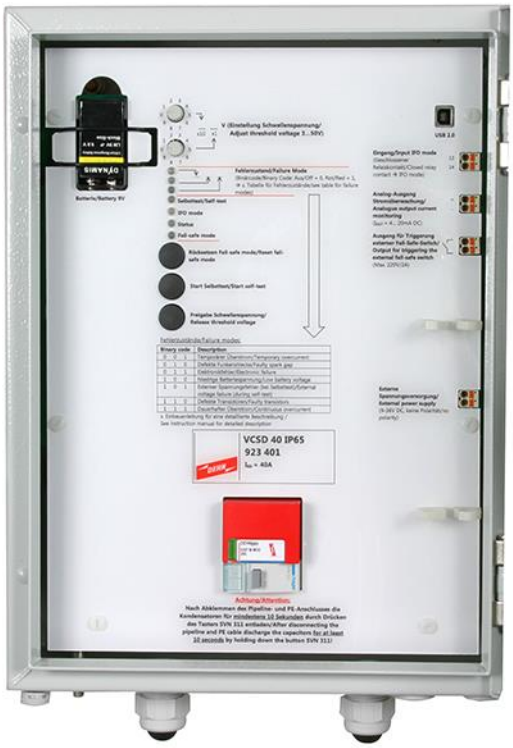

Figure 5: *Intelligent decoupling device VCSD 40 IP65 with open enclosure*

The VCSD 40 IP65 evaluates different sensor signals via a control unit, thus coordinating the interaction of the individual functional units consisting of power electronics (power unit (PU)) and a spark gap (transient unit (TU)) as depicted in **Figure 6**. Transient overvoltage of wave form 10/350 µs or 8/20 µs is discharged via the spark gap of the TU, 16.7 Hz or 50/60 Hz temporary and long-term overvoltage is dissipated to the ground along the parallel path via the power electronics of the PU. Thus, the VCSD allows coordinated and tested protection against transient, temporary and long-term overvoltage.

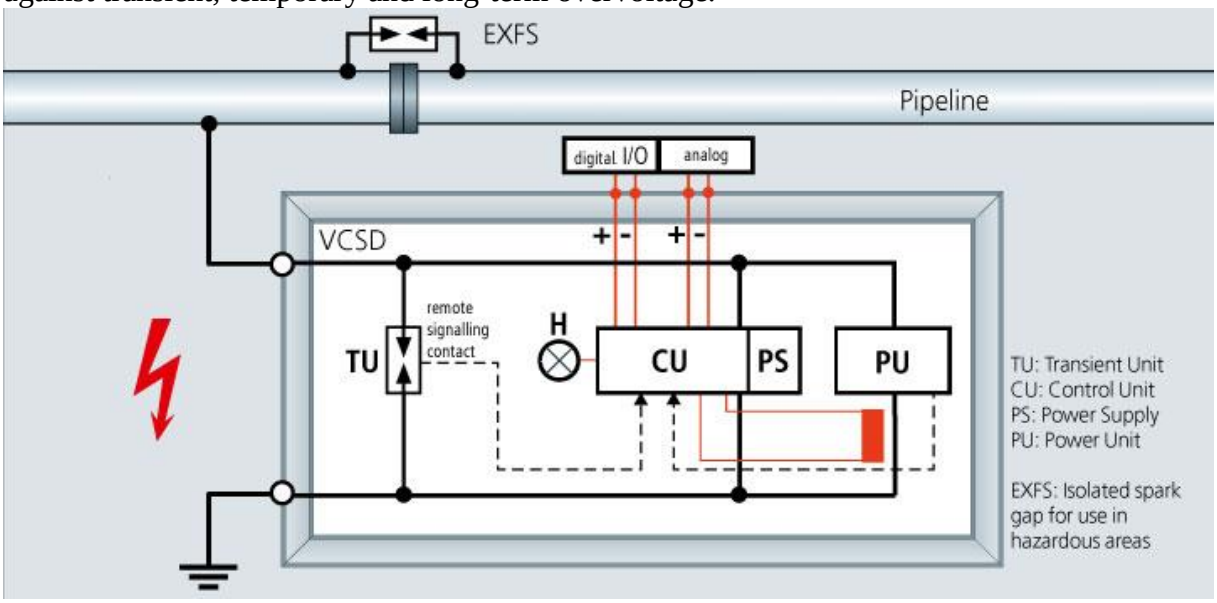

Figure 6: *Design and functional units of the intelligent decoupling unit VCSD 40 IP65*

<u>Limiting behaviour of the VCSD 40 in the time range</u>

The effects of dangerously high overvoltage can be reduced to a safe level in the immediate vicinity of the VCSD [4].

The following protection goals can be achieved:

- Personal protection in case of temporary and long-term overvoltage
- Protection against a.c. corrosion
- Protection of the devices and components of system parts connected

Transient overvoltage within a time range up to 1 ms is limited to values < 1.25 kV as shown in **Figure 7**.

Temporary overvoltage within a time range between 1 ms and 200 ms is limited to values between <940 V and <400 V.
The VCSD limits long-term overvoltage >200 ms to freely adjustable values from 3 to 50 V a.c. This threshold can be set via two rotary selector switches on the device.

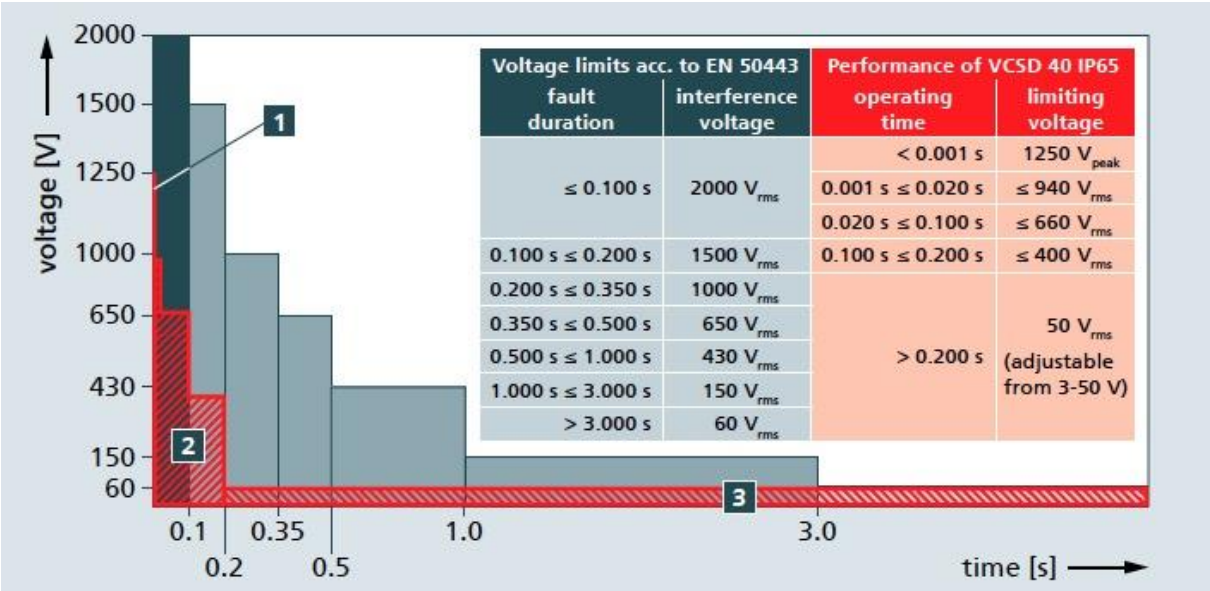

Figure 7: *Limiting behaviour of the VCSD depending on the duration of the overvoltage event*

<u>Interfaces and voltage supply</u>

In addition to the main connections to the pipeline and the earth-termination system, the VCSD has about 5 other interfaces which are illustrated in **Figure 8** and **Figure 9**.
The USB interface is used by the manufacturer for programming the control unit.

The digital input ‘digital in‘ allows to switch the VCSD on and off via remote control (e.g. from the process control system in the pipeline control centre). This is particularly required for measurements on the pipeline, for example d.c. or a.c. voltage gradient surveys (DCVG/ACVG survey). For this purpose, the VCSD is switched off (high impedance) to ensure that the pipeline capacity is not negatively affected by the decoupling unit and that the measurement results are not distorted. Consequently, the device does not have to be mechanically disconnected which is a considerable advantage over conventional solutions.
The digital output ‘digital out‘ is activated in case of a function-critical device error. This error can, for example, be displayed in the control system or an external fail-safe switch (short-circuit contactor) can be activated to galvanically earth the pipeline.

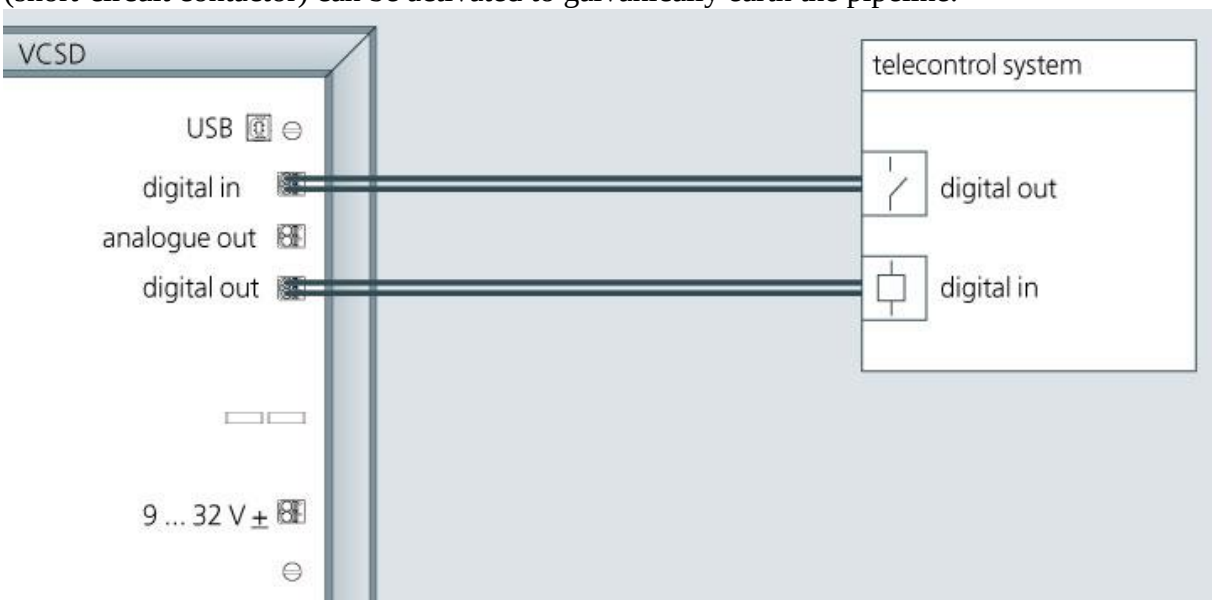

Figure 8: *Connection of the digital interfaces*

The instantaneous value of the discharge current can be provided through the analogue output as a 4-20 mA signal (scaled to 0-40 A). Consequently, a trend statement concerning the interference of the pipeline can be made in the control centre for an extended period of time (e.g. for a year).
A 9-32 V d.c. external voltage supply is required to perform a self-test and to supply the 4…20 mA analogue output. The VCSD uses the a.c. interference voltage on the pipeline to supply the control unit and ensure proper operation. If the pipeline is not influenced by interference voltage at a certain time, the VCSD is in standby mode and is supplied via the integrated battery.

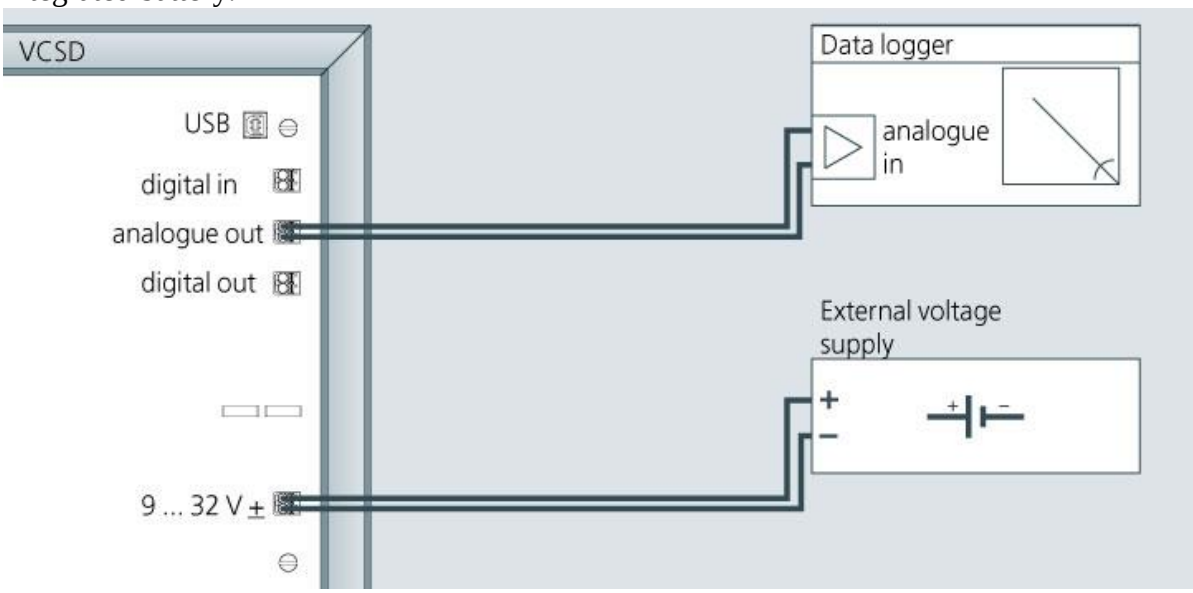

Figure 9: *Evaluation of the analogue signal and external power supply*

<u>User benefits compared to conventional mitigation units</u>

Up to this point, different technologies such as polarisation cells, capacitive decoupling units, series resonant circuits, a.c. compensation systems or the like have been used to discharge transient and long-term interference voltage. These technologies have individual advantages and disadvantages depending on their purpose of use. Compared to conventional decoupling units, modern system solutions such as the VCSD offer decisive benefits for the operator, for example:

- Remotely controllable from the control centre: Connection/disconnection in case of DCVG / ACVG measurements is not required
- Monitoring function (measurement of the actual discharge current) allows conclusions to be drawn to the interference situation of the pipeline
- High discharge capacity and excellent limiting behaviour
- No negative effects on the cathodic protection potential (d.c. potential) whilst d.c. currents are blocked
- Manufacturer-tested all-in-one system for transient, temporary and long-term interference voltages
- Easy testing by means of integrated self-test routine
- No hazardous electrolytes required thanks to fully electronic design

Summary

The VCSD 40 IP65 from DEHN is an innovative new product which offers considerable advantages and simplifications particularly for pipeline operators during the whole life cycle of the pipeline. Intensive field tests and close cooperation with the cathodic protection specialists of the operators ensure that customer requirements are optimally considered.

References

[1] Ulrich Bette, Markus Büchler: Taschenbuch für den kathodischen Korrosionsschutz, 8. Auflage, Vulkan Verlag, 2010

[2] DEHN+SÖHNE: Brochure "DEHN protects Pipelines – Cathodic Corrosion Protection Solutions", DS249/0315

[3] EN 50443: Effects of electromagnetic interference on pipelines caused by high voltage a.c. electric traction systems and/or high voltage a.c. power supply systems

[4] DEHN+SÖHNE: Instructions for use/installation instructions for the voltage-controlled short-circuiting device VCSD 40 IP65, publication no. 1880, 08/15

Neumarkt, 29.06.2016