The case study of the TLE boilers corrosion mechanism for the petrochemical plant in the aspect of intensifying production assets.

Michał Kosmatka[1], Mirosław Paćko[2], Robert Wudecki[3]

[1]*PKN ORLEN, Płock, Poland, michal.kosmatka@orlen.pl*

[2]*PKN ORLEN, Płock, Poland, miroslaw.packo@orlen.pl*

[3]*PKN ORLEN, Płock, Poland, robert.wudecki@orlen.pl*

Abstract

Market requirements for petrochemical plants are focused on maximizing the profit of high margin products, causing increasing expectations and challenges for the production assets. Despite the implementation of advanced reliability management tools, these challenges may cause the increase in operational issues. The transfer line exchangers (TLE) are crucial for the proper operation of the steam generating system in ethylene plants. Corrosion problems significantly affect the maintaining reliability and efficiency of TLE operation. This document will describe the high-temperature water corrosion in the transfer line exchangers. The authors will present results of the material, water and sediments tests, computational fluid dynamics (CFD) flow analysis and the occurrence of high-temperature water corrosion. Mentioned suggestions will explain how to minimize the influence of undesirable mechanisms on transfer line exchangers in terms of operational continuous maintenance.

Keywords

ethylene plants; transfer line exchangers; tube failure; flow and temperature distribution analysis; maintaining reliability.

Introduction

PKN ORLEN is an established player on the fuel and energy markets and at the same time – the largest company in Central and Eastern Europe. Company owns state-of-the-art integrated assets capable of processing more than 35 million tonnes of crude per annum, and markets its products through the CEE region's largest chain of nearly 2,800 modern service stations. PKN ORLEN's product line includes over 50 petrochemical and refining products sold in more than 80 countries. For several years, we have been building competences within the power industry, while in the area of mining we have our own oil and gas resources base.

PKN ORLEN works in very demanding and constantly changing macroeconomic environment. Company keeps its market position in the refinery and petrochemical production segments thanks to the continuous improvement of operational excellence. Flexibility and readiness to use the emerging market opportunities, is more and more often associated with need to enhance the quality of the production assets used. These operations require special care in the area of maintenance processes reliability, striving for an optimal level of the production assets used. It ensures the minimization of the risk related to their exploitation and finally, the ability to extend periods between turnarounds. The key areas of PKN ORLEN operation are propylene and ethylene production. When it comes to the ethylene production, crucial parts of the Ethylene Installations are systems of pyrolytic furnaces installed in the technological process within the TLE (Transfer Line Exchangers) boilers. Diagram showing such typical construction between the pyrolysis furnace and the TLE boiler can be found below (Figure 1 [1]).

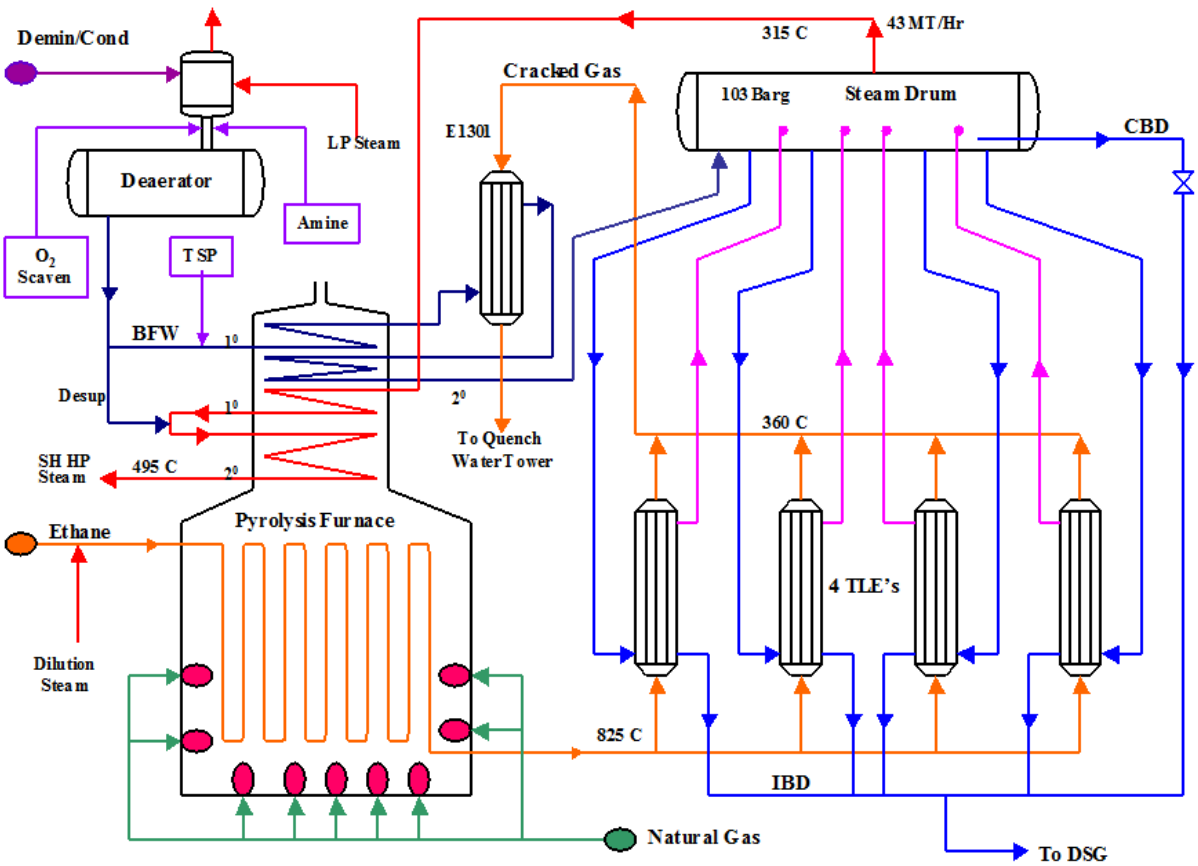

Figure 1 – Typical Pyrolysis Furnace and Transfer Line Exchangers.

The case study of the corrosion issue

Special construction of the TLE boilers is determined by the need to transfer the heat flux, generated under extremely difficult technological conditions. The stream, coming out of the gas pyrolysis, flows through the centre of the inner tubes. The stream consists mainly of hydrocarbons, its pressure is about 0.5 bar and temperature is 780÷840°C. The whole production process is cyclical and takes about 60 days. Periodically, during the decoking, carbon deposits formed inside the boiler inner tubes as part of the technological process, are being disposed of. In the course of decoking, the temperature inside the tubes reaches up to 880°C. On the external side of the inner pipes, there is a water-steam mixture, with the temperature of 320°C and 150 bar pressure. Because of the substantial difference between the temperatures mentioned, which equals 520°C, the whole process requires intensive heat transfer through the inner tubes. These pipes are made out of a 15Mo3 steel (according to DIN 17175). Diagram showing the pyrolytic gases inlet chamber and flow of the process streams for a double pipe structure is shown in a Figure 2 [2].

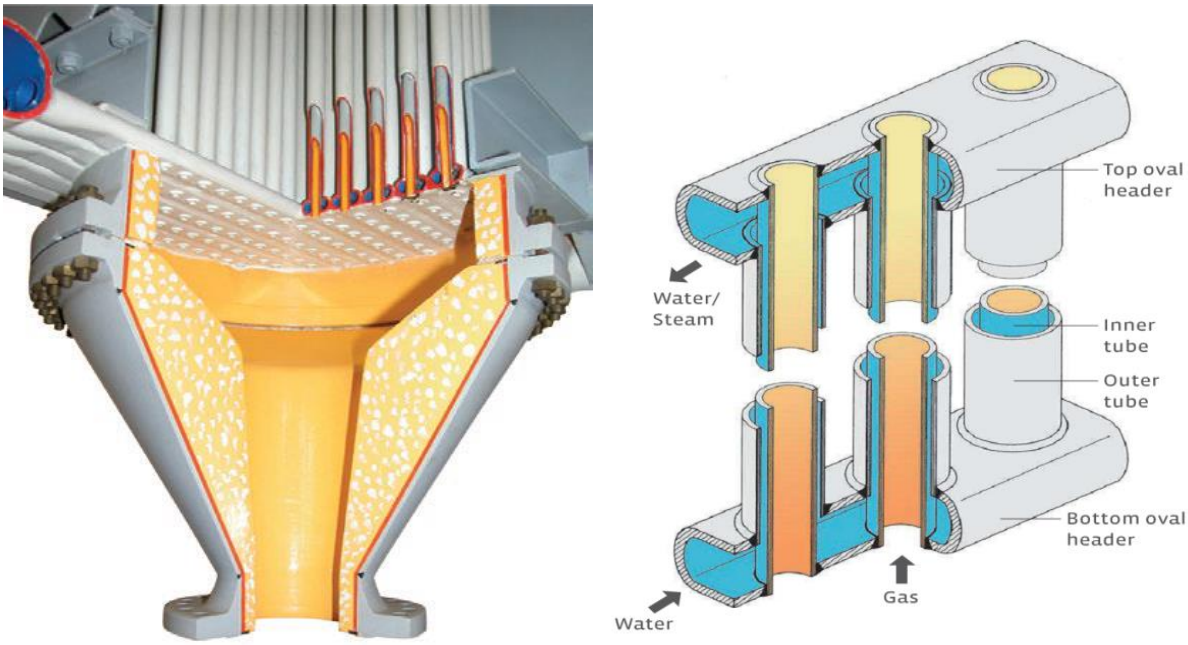

Figure 2 – Stream flow diagram in the system Schmidt'sche® double tube/oval header.

After 10 years of working with this TLE construction, first signs of the boiler degradation were noticed. During one of the routine boiler cleanings (from the pyrolytic gases side) and the diagnostic tests, led by the Material Research Team of PKN ORLEN, thinning of the inner tubes located alongside the hot bottom was detected. Corrosion was found outside the pipes (from the water-steam mixture side), causing significant loss of the pipes thickness and oval collectors forming the hot sieve bottom. The occurrence of degradation was confirmed by the videoscope (Figure 3).

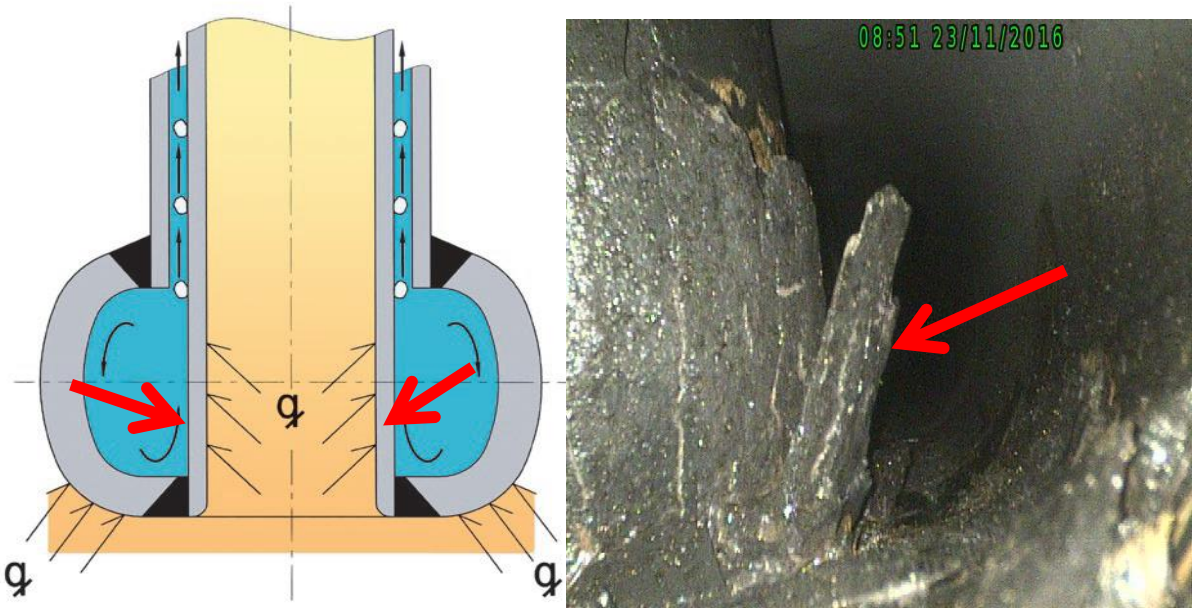

Figure 3 – Photograph taken using the videoscope technique, showing the water-steam space with visible corrosion degradation on the inner tubes.

After an initial assessment of the issue, PKN ORLEN took an immediate action to fix detected damages by replacing the thinned tubes sections. In such cases implemented in maintenance services of PKN ORLEN management models are based on the in-depth analysis of the ensuing issue. In order to maintain reliability of the TLE boilers, an analysis of their operation was conducted. Analyzed data included: the extent of the material structure degradation, efficiency of the treatment process and the quality of the boiler water, the sludge influence on the intensity of the corrosion, temperature distribution in places of damage occurrence and finally, the correlation of boilers load with their technical condition.

Metallographic material tests, led by the Material Testing Team of PKN ORLEN and Warsaw University of Technology [3], eliminated the influence of the structural changes on the corrosion processes intensification occurred on the tubes surface (water-steam side). Reviews of the industrial treatment and the boiler water quality have shown that despite the extensive measurement systems, modernization (i. e. installation of the new ion exchangers in the boiler treatment process) and correct operation, there is a need of further construction development towards very precise on-line measurement and control system. This process has to be preceded by the analysis of the whole water-steam system operation, including also the the deaerator's performance calculation and taking into account the current and prospective production loads.

The growing production needs and the recent increase in the load of the TLE boilers result in increasing thermal loads of devices mentioned. This affects not only on the parameters of the boilers themselves but also how the ongoing processes are taking place within the entire water-steam system. The amount of the deposit, which could be found on the pipes' surface, is an extremely important factor when it comes to the corrosion processes. It has a significant

impact on the temperature distribution, which results in faster corrosion. Both pieces of research conducted by the Gdansk University of Technology [4] and the Warsaw University of Technology [3] have shown that the deposits thickness on the collected fragments from the pipes exceeded the acceptable standards from the technological point of view. Received deposits consisted mainly of magnetite (Fe_3O_4) – a product of high-temperature steel corrosion in the water-steam environment. When the thickness of the surface reaches 0.3mm, its temperature automatically increases by 30÷40°C.

The corrosion processes are continuous. Therefore, the deposits thickness rises regularly during the boilers' operation. Thick sludge on the tubes surface can possibly act as thermal insulator, as well as diffusion barrier, causing the formation of the so-called "hot spots". When the temperature reaches up to 570°C, magnetite's thermal expansion is almost twice as high as steel's thermal expansion. That cracking and accelerates the corrosion processes in the spots where the magnetite layer is too thick.

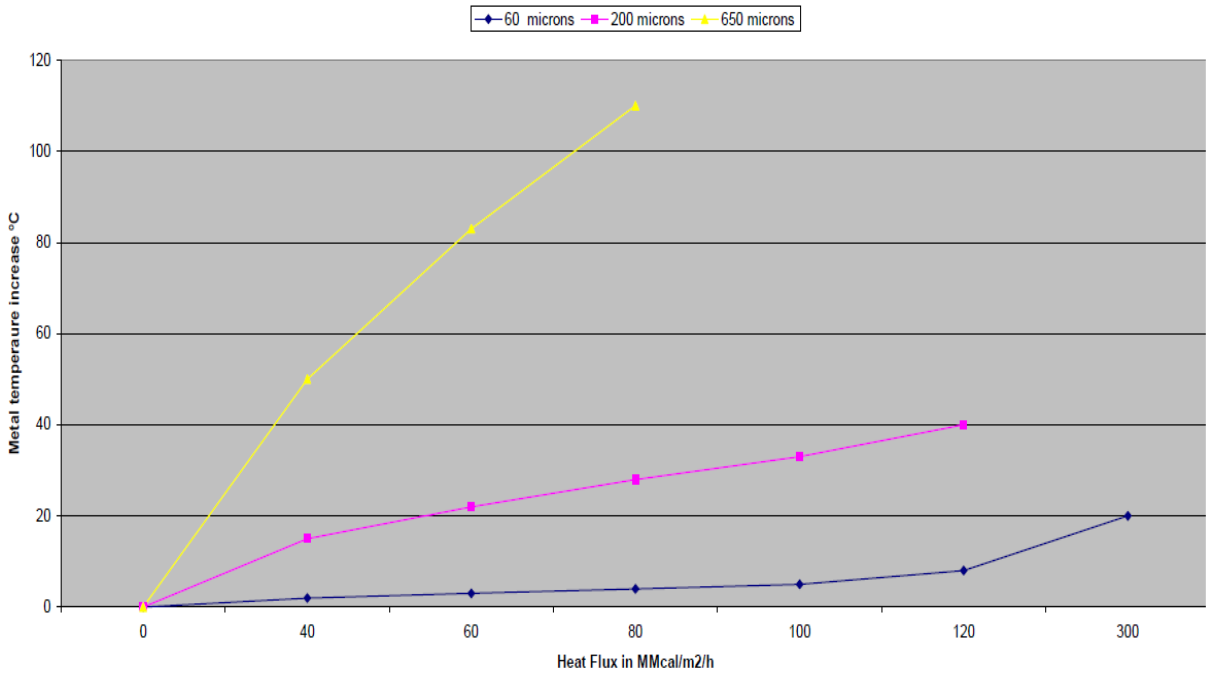

Figure 3 – The influence of the deposits amount on the increase of the tubes surface temperature.

As shown in Figure 3 [5], the local increase in sediment thickness from 60 µm to 650 µm can cause the rise of the tubes surface temperature of even 100°C, resulting in faster local corrosion. What is also shown, is the increase of this dependence in relation to the growing device heat load. That is why devices operating in the pressure range higher than 135 bar have reduced tolerance to the increase of the sediment above the operational acceptable value under certain real working conditions.

In order to assess the actual temperature and to determine the local heat exchange conditions of the tubes, an analysis of the temperature distribution within the occurrence of the damage has been carried out. To analyse data in proper way, Warsaw University of Technology [3] used numerical methods of Computer Fluid Dynamics (CFD). First of all, the flow velocity

distribution of the water supplying the inter-pipe space was determined. On this basis, the convective coefficients of heat transfer through the pipe and the heat flux transmitted by it were calculated. Afterwards, the temperature distributions of this element of the structure were measured.

Received flow velocity distributions indicate a significant variation of flow in the areas of geometry changes and flow direction. The merit of the water inlet velocity decreases in the central part of the oval collector, where the two-sided inflow causes the flow to slow down and stagnation (Figure 4). Such areas favour the accumulation of the solid impurities and sediments, which causes the local deterioration of heat transfer in the water-steam space. Effects of the phenomena occurring at places of reduced water velocity are: the increased temperature of the tubes surface (Figure 5) and high temperature gradients in the places near the connection with the hot inlet relative to the part of the tube covered with a typical protective magnetite film. Spots where the stagnation of water and local wall overheating were observed, are the places of observed intensive pipes corrosion in the water-steam mixture side.

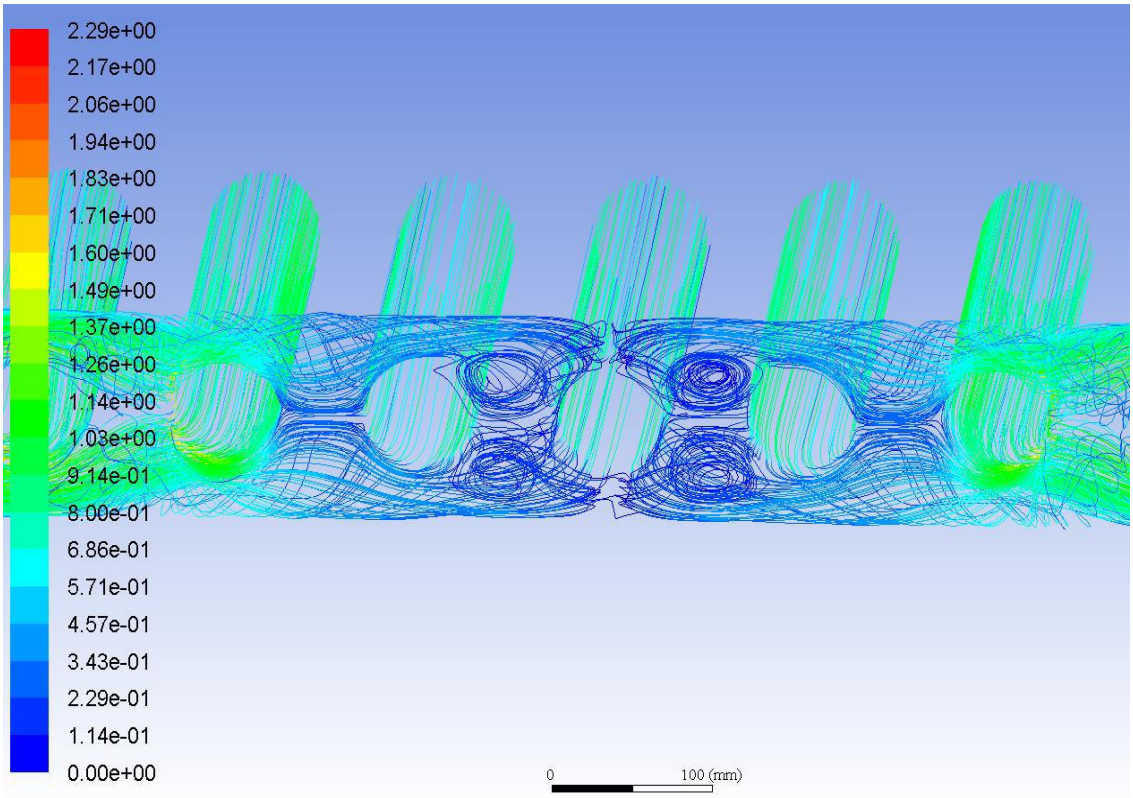

Figure 4 – Power lines and the water flow in the oval collector [m/s]. The areas of blue lines indicate locations of slow and stagnant water flow.

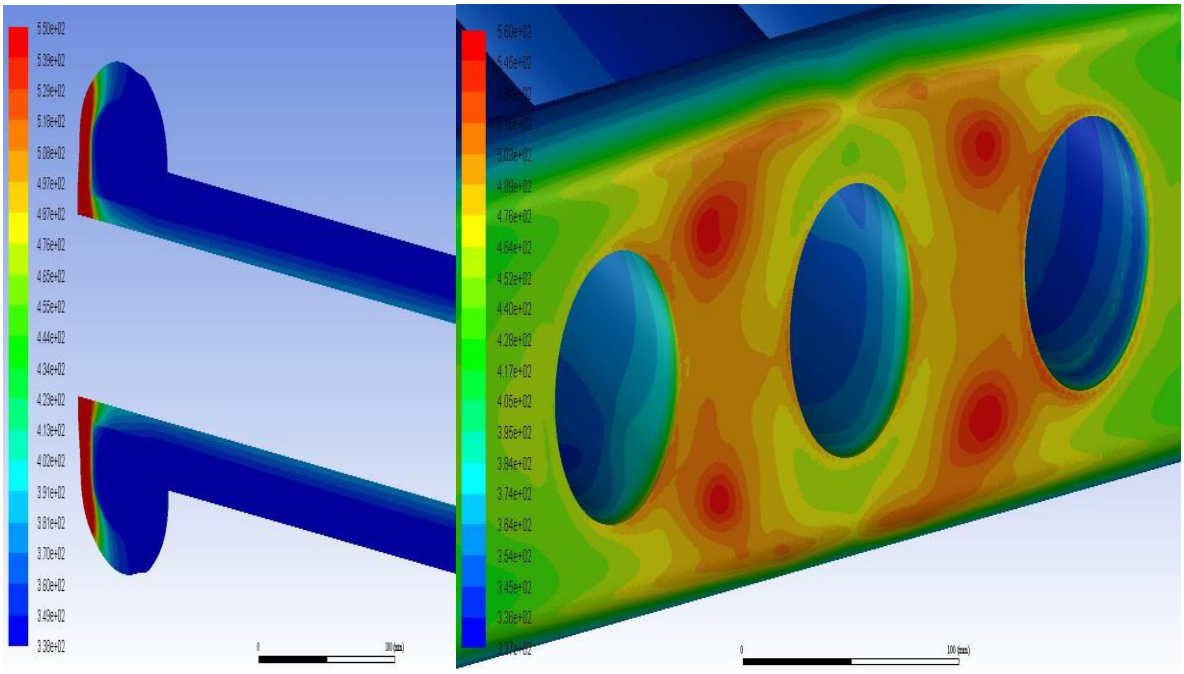

Figure 5 – Temperature field in the spots of flow slowdown, tube cross-section [°C]. The red areas show the places of overheating. Visible correlation of overheating sites with the areas of water stagnation.

Conclusions

The material used in the inner tubes (15Mo3 steel), which in the water-steam mixture environment is highly sensitive to corrosion, when the temperature notably exceeds the limit (in this case that is 300÷320°C), in the current construction solution and technological load does not guarantee sufficient corrosion resistance.

As part of the comprehensive management and control of corrosion processes, methods of monitoring and a number of immediate and necessary measures, preventing the reduction of the production assets availability, have been proposed.

In the area of ad hoc operations, the following were indicated:

- preparation of the instructions of monitoring pipes and oval collectors thickness(based on the results of the CFD analysis), assessment of the sediments number(VT tests through videoscope) and periodical sediments removal by pickling (acid cleaning), hydrodynamic cleaning;
- making additional nozzles to allow proper access to VT tests (videoscope) and hydrodynamic cleaning of the water-steam space of the oval bottom collectors;
- replacement of damaged inserts made originally of 15Mo3 (according to DIN 17175) for inserts made of INCONEL 625;
- regular validation of the water deaerator system, verification of the procedure for the boiler water system protection during the shut-down/repair of the furnace in order to protect it against excessive penetration of moisture and oxygen from the air.

The target operations include:

- analysis of the possibility of redesigning the existing boiler structure solution in terms of changing the boiler tubes construction material into material with higher corrosion resistance, taking into account real working conditions;

- development of the comprehensive boiler replacement strategy based on the results of diagnostic tests and estimated time of possible further safe operation;
- replacement of boilers with new ones, using new construction or material solutions, bear in mind previous operational experience,
- analysis of the work of the entire water-steam system including re-count of the deaerator performance under current production loads, re-count of reduction constrictions limiting the discharge from the deaerator, consideration of the possibility of adding on the synoptic deaerator's panel displaying the equilibrium temperature for water under current pressure, building on-line oxygen metering dissolved in the water supply to TLE boilers.

References

1. James O. Robinson, Avoiding Waterside Corrosion Problems in Ethylene Plant Steam Systems, EPC Conference/AIChE Spring Meeting New Orleans, April 2014.
2. Schmidt'sche® Transfer Line Exchangers for Ethylene Plants, ARVOS GmbH, SCHMIDTSCHE SCHACK Division.
3. Execution of boiler tubes testing in ethylene plant, Warsaw University of Technology, Faculty of Materials Science and Engineering, Research Laboratory for Industry.
4. Explanation causes corrosion of boiler tubes of the steam generator systems in ethylene plant, Gdansk University of Technology, Chemistry Faculty, Department of Electrochemistry, Corrosion and Materials Engineering.
5. Joan Estilles, Manuel Soria, Reducing Corrosion and potential Boiler Failure with Superior Iron Transport Technology, 2nd Technical Meeting of NACE Jubail Section –KSA 27th January 2009.